A&QT-R 2004 (THETA 14)
2004 IEEE-TTTC-International Conference on Automation,
Quality and Testing Robotics
May 13-15, 2004, Cluj-Napoca, Romania

INSTALLATION FOR ELECTRIC LOCOMOTIVES DRIVING WITH BRUSHLESS D.C. MOTOR

Author: ing. Augustin Popescu

SC SOFTRONIC SRL
Strada Unirii, No. 37,
CRAIOVA, DOLJ, 200409,
Telefon/Fax: 0040251 414822
e-mail:softronic@softronic.ro

This paper-work presents a installation for driving of the electric locomotive dimmer. This installation uses a brushless d.c. motor operated by a d.c. source. This system leads to increasing of the operation reliability ando f the stopping accuracy on the step.

Key words: driving of the electric locomotive dimmer, brushless d.c. motor

1. INTRODUCTION

This paper present a driving installation for electric locomotives characterized by high reliability, simplified integration diagram and reduced maintenance.

2. PRESENT STAGE

The locomotives with voltage adjustment on the high voltage side are equipped with an electro-mechanical system for switching the taps on the regulating transformer, called dimmer. The dimmer is driven by an d.c. motor, with brushes with mixed excitation. During the locomotive operation this motor has to switch rapidly from one step of the transformer to another and stop precisely on each step. In the case of the electric locomotive type LE 5100 KW manufactured by ELECTROPUTERE Craiova , the dimmer has 50 steps. At the driver's command, during traction, the dimmer has to be positioned on the steps 1,3,5 and any step bigger than 5 by commands FORWARD, MAINTAIN or DECREASE, with an accuracy better than ± 10 % of the interval between two steps . These functions are achived by a positioning system that uses as sensors a contact cames system that detects positioning on each step and on the steps 1,3,5 and executing element a d.c. servomotor with mixed excitation. The servomotor works in traction condition to drive the dimmer and in electric breaking conditions from the moment it was detected that it is necessary to step on a step until effective stop. In these conditions the excitation

is series and parallel to obtain minimum errors and the best times within the positioning. In the driving, the information concerning the step where the dimmer is positioned is displayd by a suplementary consisting of a position transducer and two indicator apparatus.

This driving system is characterized by a reduced reliability due to the use of electric motors with commutator and brushes that operates in conditions of high stresses.

Due to the high number of cames and contacts, due to the inherent variation of the voltage supply (locomotive battery) and to the fact that the dimmer modifies its resistent torque due to wear, the positioning on steps is not done with necessary accuracy. This is very harmful for the locomtive transformer. This state is detected by the protection circuit that commands the locomotive disconnecting from the contact line. Presently one of main causes of failure of the electric locomotives in operation in our country is the defective operation of the dimmer driving system.

3. INSTALLATION DESCRIPTION

The installation presented user as executing element a brushless d.c. motor, characterized by high reliability driven by processor system through a three- phase bridge.

To detect the dimmer position the number of cames is reduced to two without contact: step 1 and the stop area for each step. The installation receives information directly from the command controller mechanically driven, by soft command of the motor rotation in the required direction.

Due to the use of the brushless motor and simple of the integration diagram, the installation increases the dimmer reliability and reduces the manitenance costs.

The installation transmits information concerning the step where the dimmer is possitioned to the displays in the driving posts or to other installations in the locomotive through the serial connection RS 485.

The installation contains the central unit module (9), the d.c. brushless motor (2) for dimmer driving that has integrated in construction the position transducer (3) and two position sensors without contact (optical cames) (4) and (5) placed on the dimmer (1). The central unit contains a microprocessor (micro-controller and signal digital processor with input) output numerical interfaces (7) and a three-phase bridge (6) for the adjustable voltage supply of the corresponding motor windings (2) . The value of the step where the dimmer is to be posotoined is made from the command controller placed in the driving posts the processor has an insulated bidirectional serial connection RS 485 to transmit information concerning the step to the displays in the posts or to other installations (10) .

The installation uses for driving correct positioning of the dimmer (1) a brushless d.c. motor with permanent magnets (2) that has enclosed in its construction a position transducer (3) necessary to switch its phases. This motor consists of a rotor with performant permanent magnets and a stator with three.phase windings. Detection of rotor position against the stator with a view

to voltage supply the corresponding windings is done with a position transducer without contact made with three Hall sensors placed wear the circumference of a magnetic disc interlocked with the motor shaft. Due to the simple construction and eliminating the commutator this type of motor is very solid and reliability, having the same characteristicsas a d.s. motor with brushes and permanent magnets, which recommand it as a performant servomotor for accurate drivings.

The installation contains, inside the central unit module (9) placed near the motor (2), the processor unit (7) equipped with micro-controller or signal digital processor (DSP) , numerical input/output interfaces and three-phase bridge (6) .

The information concerning positioning of the dimmer on step 1 and on each step are picked up with two optical sensors (4) and (5) .When power supply, the motor is commandedto position the dimmer on step 1 , using the information from the two sensors.

The processing unit (7) receives information concerning the step the dimmer is to be positioned on from the command controller (8) from the active driving post. Knowing the current position , the controller command the motor rotation in, one direction or the other based on the information received from the motor transducer (3) , by activating the corresponding arm of the three-phase bridge (6). The constant speed rotation , independent of the supply source, is achived by using a soft speed regulator P.I., that uses as measured values the time interval between the impulses generated by the transducer (3) and as output signal to the three-phase bridge a PWM signal (impulses modulated in duty factor) that modifies the voltages applied to the motor.

When the dimmer gets to the area of the step where the stop is wanted, the sensor (5) detect the situation, the processor switches the motor to the inverse current braking regim, by commanding the motor rotation in the direction oposite to its movement. The braking is commanded by modifying the duty factor of the voltage applied to the motor, based on a adjustement algoritm having as imposed values, an ideal starting speed diagram. At the stopping position, the motor is magnetized with a reduced voltageon phases, depending on the rotor position, achieving this way a permanent maintained braking.

4. CONCLUSIONS

Using of a brushless d.c. motor for driving the electric locomotives dimmers represent a solution simplifies the integration diagram and it is characterized by high reliability.

5. BIBLIOGRAPHY

1. Ganslle, J. The art of Designing Embedded System, Newnes, Boston, 1999

2. *** Bodine Electric Catalog
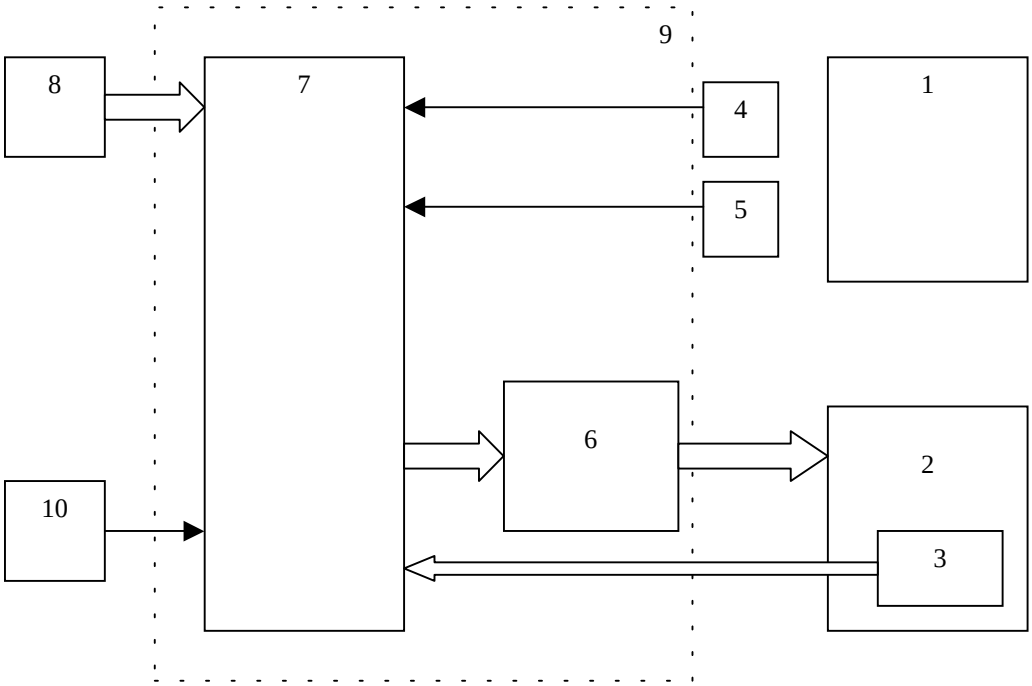
FIGURE 1